SPARE PARTS MANUAL

FRL023ASUKNB

Luggie Elite Plus

INDEX

1. HANDLEBAR ASSEMBLY----------

2. CHASSIS COVER AND BATTERY ASSEMI

---

3. STEERING----------

4. CHASSIS ASSEMBLY----------

5. DRIVE SYSTEM----------

6. SEAT FOLDING ASSEMBLY----------

7. CONSOLE AND WRING SYSTEM----------

1. HANDLEBAR ASSEMBLY

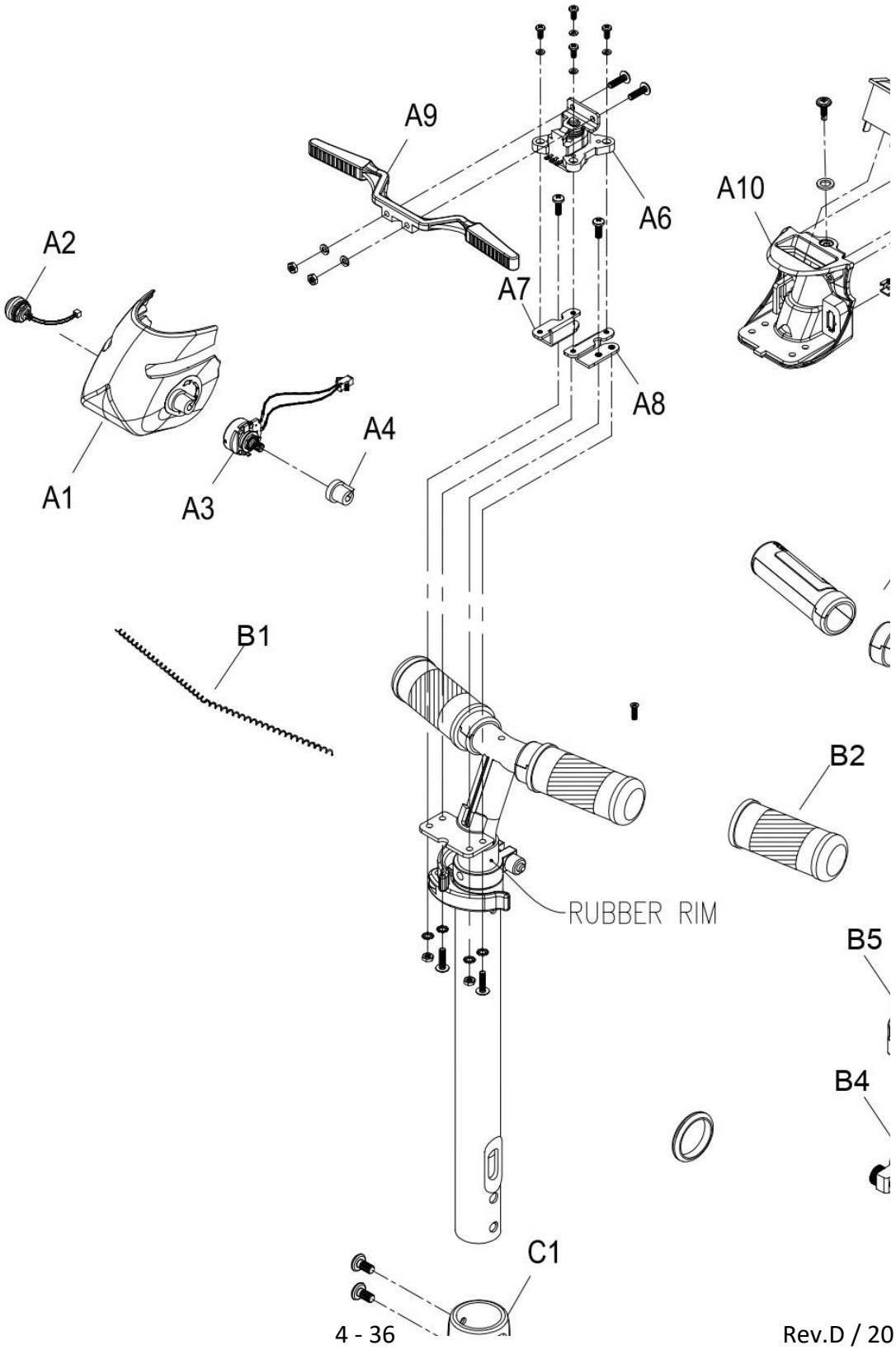

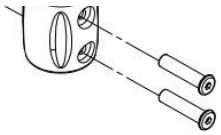

1. HANDLEBAR ASSEMBLY

販售 Selling	項目 ITEM	品號 Part Number	中文品名 Part Name-CN	英文品名 Part Name-EN	數量 QTY
	A1－C1				
	A1－A12	AA0A-0200-OD1	把手上控總成	Top console cover assy.	1
	A1－A4	AA03-FB00-OD1	把手前蓋總成	Tiller front cover assy.	1
	A1	PP03-0121-OD1	把手前蓋	Tiller front cover	1
	A2	PKE1-0272-A	喇叭開關	Horn button	1
	A3	PAE1-0106-MO	20KVR小總成	20KVR Potentiometer	1
	A4	PP01-0503	速度旋鈕	Speed knob	1
	A5－A7	PA02-A700	5KVR小總成	5KVR Potentiometer assy.	1
	A5	PKE1-0305	5KVR可變電阻	5KVR Potentiometer	1
	A6	PM02-0109-R	5KVR固定座-右	Potentiometer plate(Right)	1
	A7	PM02-0109-L	5KVR固定座-左	Potentiometer plate(Left)	1
	A8	PP02-0602	塑膠撥桿	Wig wag accelerator	1
	A9－A12	AA02-FB00-OD1	把手後蓋總成	Tiller rear cover assy.	1
	A9	PP02-0130-OD1	把手後蓋	Tiller rear cover	1
	A10	PKE1-0713	LED電量顯示器	Batterymeter	1
	A11	PKE1-0110	電源開關	Power switch	1
	A12	PKE1-0272	8P信號線	Electronic	1
	B1－B5	PA01-A602-1	伸縮T把小總成	Tiller assy.	1
	B1	PM06-0615	拉簧	Spring	1
	B2	PP02-0206	把手握套	Hand grip	2
	B3	PP02-0700	把手伸縮外管	Plastic cap	1
	B4	PM10-0502	快拆-31.8	Clamp assy.	1
	B5	PM10-0503	快拆-28.6	Clamp assy.	1
	C1	PA01-A120	軸套小總成(螺絲殼)	Casting, assy.	1

2. CHASSIS COVER AND BATTERY ASSEMBL

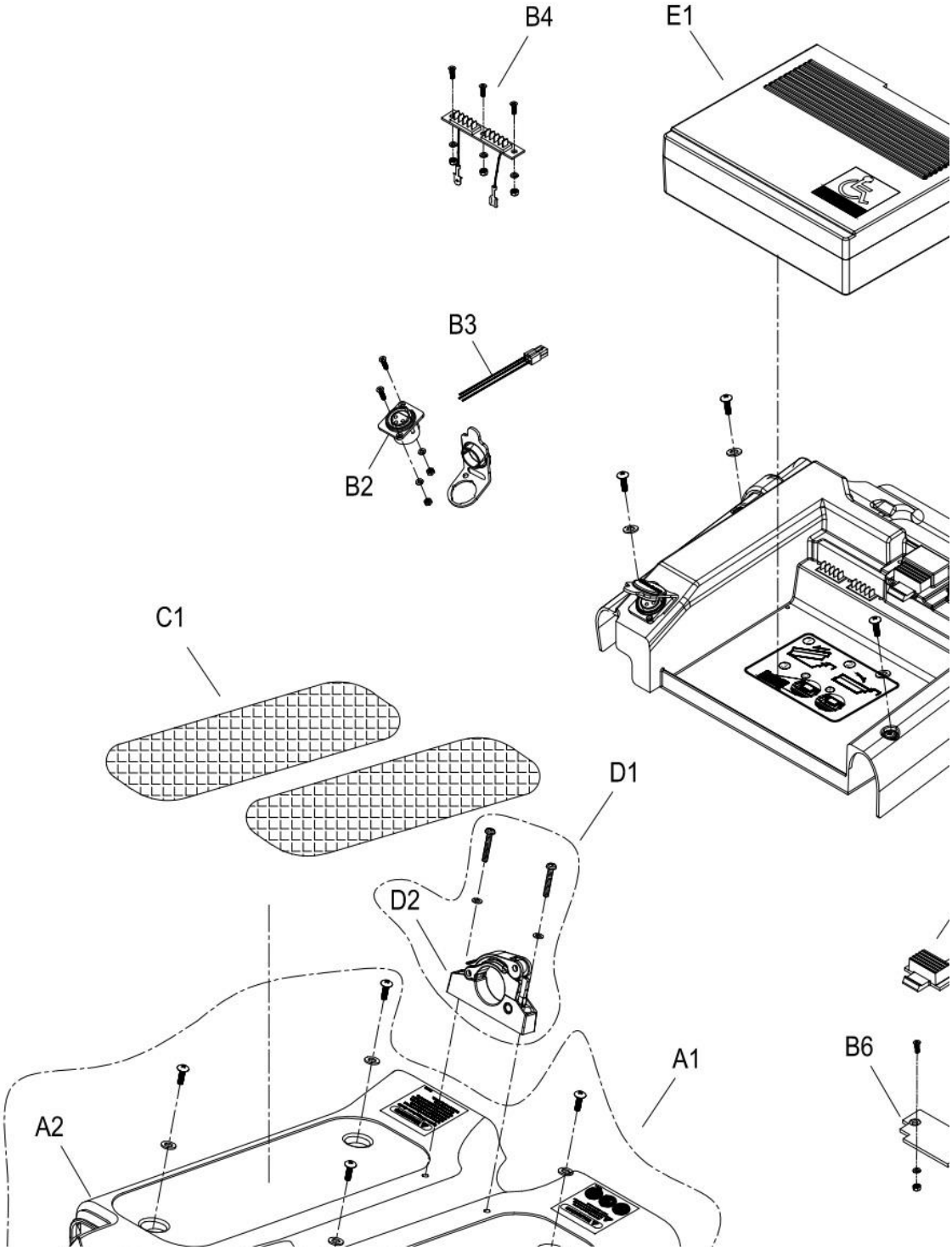

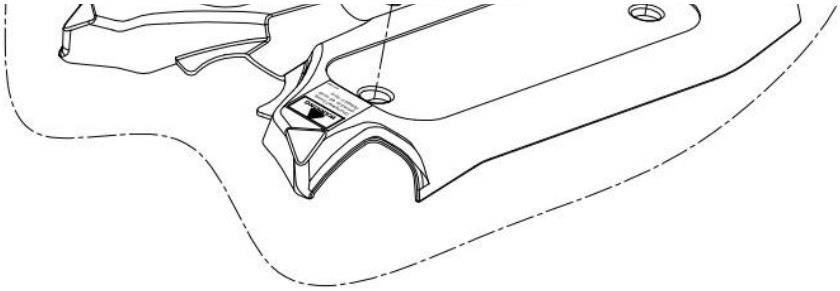

2. CHASSIS COVER AND BATTERY ASSEMBL

販售 Selling	項目 ITEM	品號 Part Number	中文品名 Part Name-CN	英文品名 Part Name-EN	數量 QTY
	A1－E1				
	A1	AA05-FAAAC04F◎	前車殼總成	Front chassis cover assy.	1
	A2	PP04-0137-◎	前車殼	Front chassis cover	1
	B1－E1	AA06-FAAAD04F◎	後車殼總成	Rear chassis cover assy.	1
	B1	PP05-0127-◎	後車殼	Rear chassis cover	1
	B2－B3	PAE1-0410-NP-A00	充電座小總成	Charge socket assy.	1
	B2	PKE1-0905-A00	充電座(無PUSH)	Charge socket	1
	B3	PKE1-0231	4P充電線	Charging cable	1
	B4	PAE1-1400	電池插座小總成	Battery connector assy.	1
	B5－B6	PAE4-1000	電池前卡鉗小總成	Battery locker assy.	1
	B5	PP05-0602	電池前卡鉗	Sliding caliper	1
	B6	PP05-0603	電池前卡鉗固定板	Plastic Plate	1
	C1	PP04-0410	止滑踏墊	Carpet	2
	D1	PA07-0010	T把固定座小總成	Tiller clamp assy.	1
	D2	PM02-1001	T把固定座	Tiller clamp	1
	E1	PA04-A702-B	電池盒小總成	10.5ah Lithium battery	1

3. STEERING

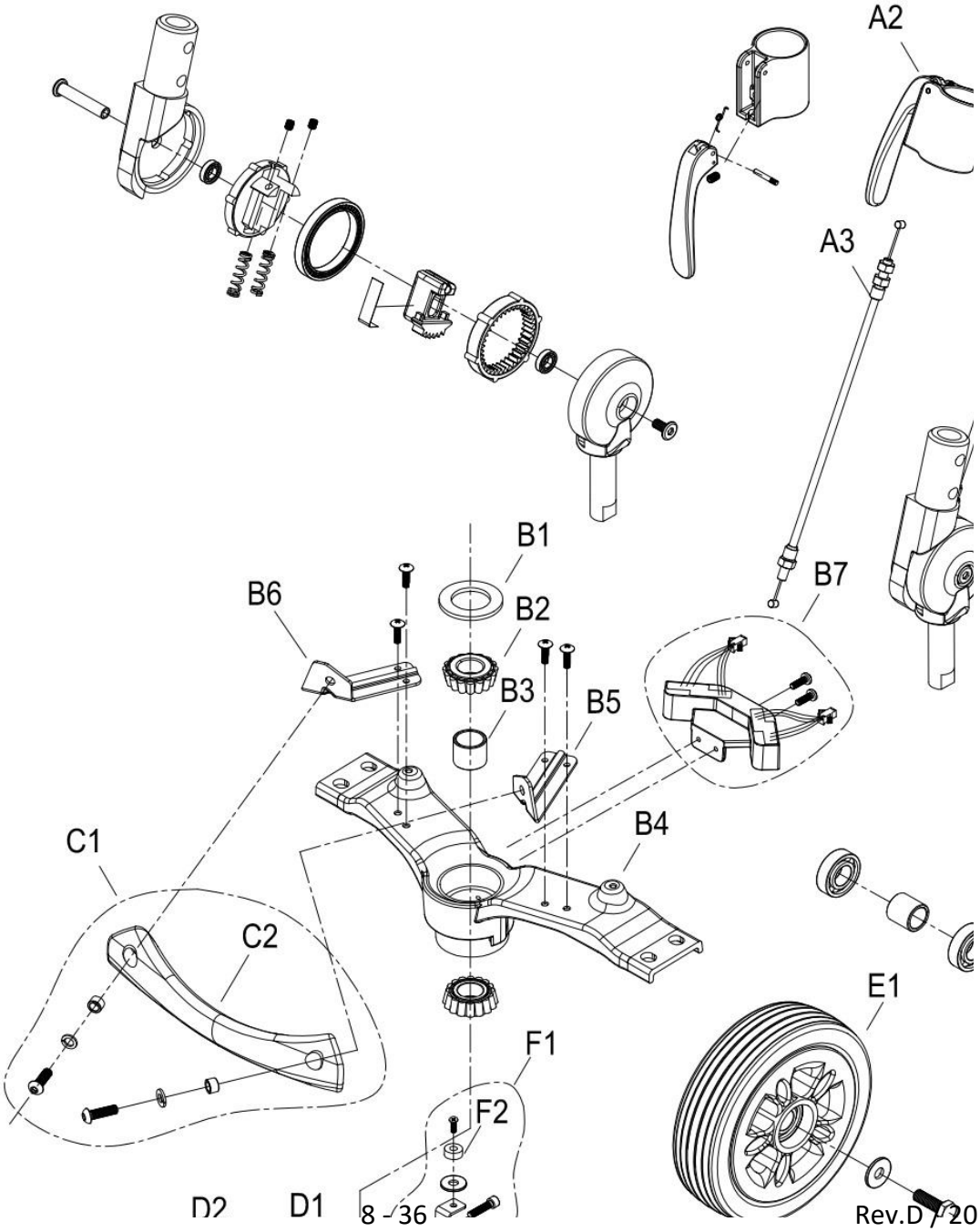

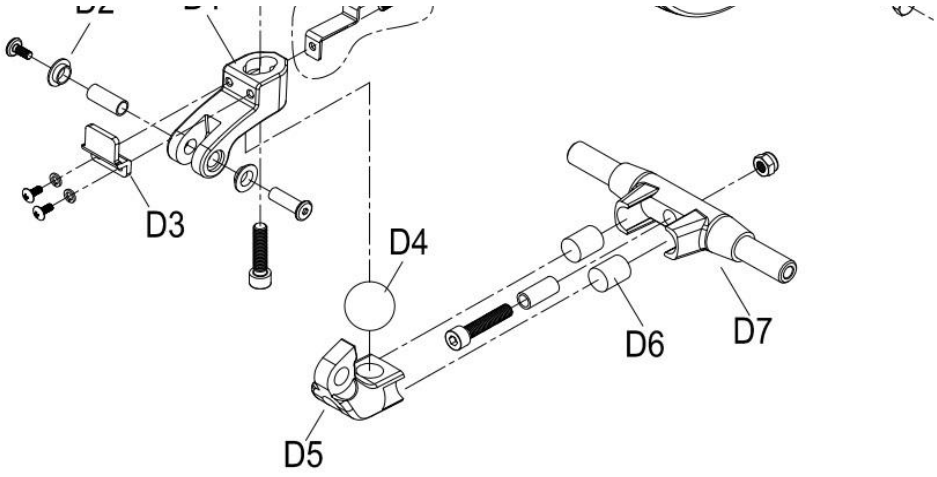

3. STEERING

販售 Selling	項目 ITEM	品號 Part Number	中文品名 Part Name-CN	英文品名 Part Name-EN	數量 QTY
	A1－F2				
	A1－A3	AC05-FAXAA-IG	角度調整器總成	Handlebar joint base assy.	1
	A1	PA10-A104-IG	角度調整器小總成	Handlebar joint base assy.	1
	A2	PA01-A100	板機座小總成	Tiller trigger assy.	1
	A3	PM19-0306	Y線	Reverse cable.	1
	B1－B6	PA06-0007	首管固定座小總成	Front axle assy.	1
	B1	PP06-0204	首管防塵墊片	Rubber spacer	1
	B2	PM00-0310	軸承	Bearing	2
	B3	PM00-0120	套管	Bushing	1
	B4	PM06-1207	首管固定座	Front axle	1
	B5	PM06-1801-L	提把固定片-左	Front bumper bracket (Left)	1
	B6	PM06-1801-R	提把固定片-右	Front bumper bracket (Right)	1
	B7	PAE4-1014	霍爾IC開關小總成	IC switch assy.	1
	C1	PA06-A420	PU提把小總成	Front bumper assy.	1
	C2	PP04-0203	PU提把	Front bumper	1
	D1－D7	PA09-0201	前避震小總成	Shock absorber assy.	1
	D1－D3	PA09-0202	轉軸上座小總成	Shock absorber assy.	1
	D1	PM09-0551-GD	轉軸上座	Shock absorber	1
	D2	PP06-0601	T型襯套	Plastic bushing	2
	D3	PM06-1211-1	轉向限制塊	Stopper	1
	D4－D7	PA09-0204	轉軸小總成	Shock absorber assy.	1
	D4	PP00-0408	橡膠圓球	Rubber ball	1
	D5	PM09-0550-GD	轉軸	Shock absorber	1
	D6	PM00-0221	鐵柱	Column	2

	D7	PM09-0514-GD	減震軸心	Axle	1
	E1－E2	AC07-FAAXBB	前輪總成	Front wheel assy.	2
	E1	PP91-0002	輪圈蓋	Rim cap	1
	E2	AC07-FAAXBA	前輪	Front wheel	1
	F1	PA07-0021	磁鐵固定座小總成	Bracket for magnet assy.	1
	F2	PM00-1001	磁鐵	Magnet	1

4. CHASSIS ASSEMBLY

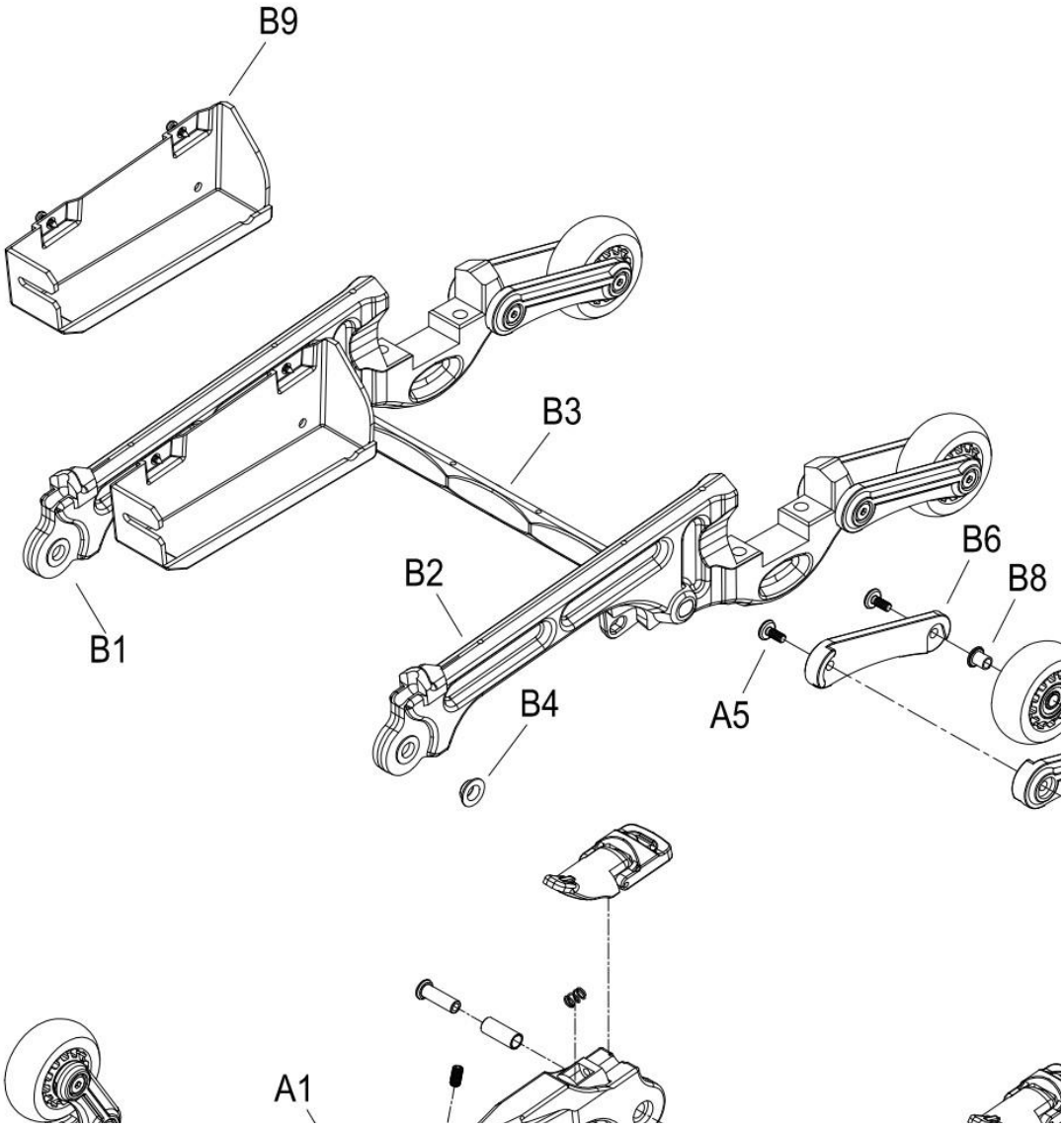

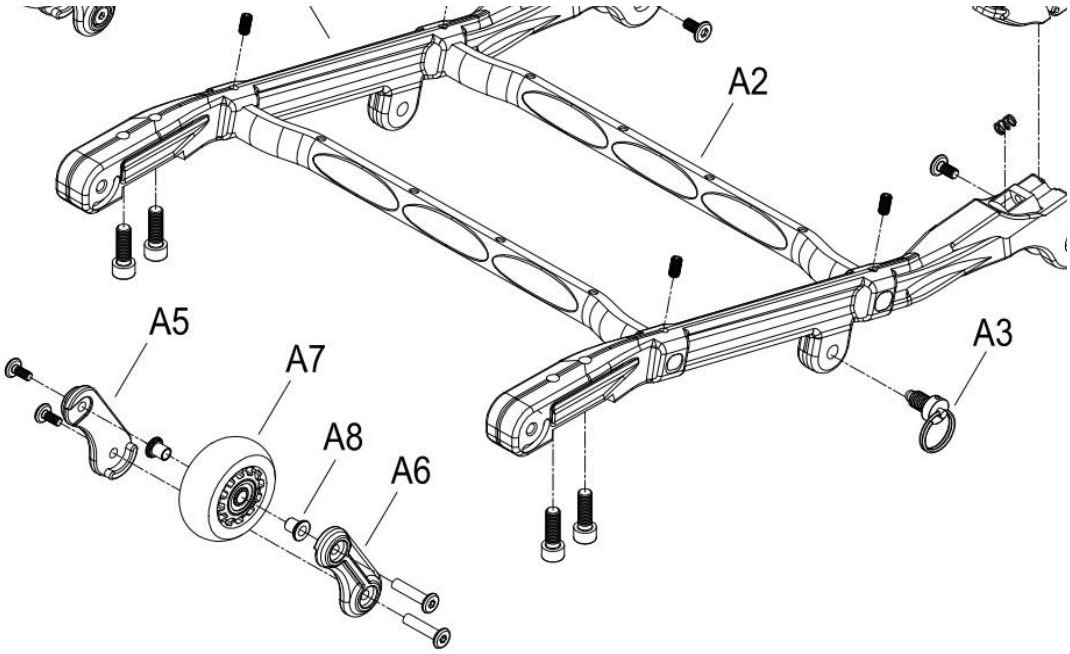

4. CHASSIS ASSEMBLY

販售 Selling	項目 ITEM	品號 Part Number	中文品名 Part Name-CN	英文品名 Part Name-EN	數量 QTY
	A1－B9				
	A1－A8	AB01-FA15	前車架總成	Front chassis assy.	1
	A1－A2	AB01-0001	前車架小總成	Front chassis assy.	1
	A1	PM06-0140	前車架	Front frame	2
	A2	PM07-2010	橫桿	Cross bar	2
	A3	PV06-0804	拉環式拉梢	Chassis locking pin	1
	A4	PA09-A603	轉折器扣件小總成	Chassis hook assy.	2
	A5－A8	PA07-A103	前防傾輪小總成	Transport wheel assy.	2
	A5	PP07-0400-R	防傾輪固定座-右	Transporting wheels bracket (Right)	1
	A6	PP07-0400-L	防傾輪固定座-左	Transporting wheels bracket (Left)	1
	A7	PP07-0104	防傾輪	Anti-tip wheel	1
	A8	PM00-0117	T套管	Plastic bushing	2
	B1－B9	AB02-FAALD	後車架總成	Rear chassis assy.	1
	B1－B4	AB02-0001	後車架小總成	Rear chassis assy.	1
	B1	PM07-0147-R	後車架-右	Rear frame (Right)	1
	B2	PM07-0147-L	後車架 -左	Rear frame (Left)	1
	B3	PM07-2010	橫桿	Cross bar	1
	B4	PP06-0601	T型襯套	Plastic bushing	4
	B5－B8	PA07-A113	後防傾輪小總成	Anti-tip wheel assy.	2
	B5	PP07-0108	防傾輪	Anti-tip wheel	1
	B6	PP07-0401-R	防傾輪固定座-右	Transporting wheels bracket (Right)	1

	B7	PP07-0401-L	防傾輪固定座-左	Transporting wheels bracket (Left)	1
	B8	PM00-0117	T套管	Plastic bushing	2
	B9	PA05-0001	下控制盒小總成	Controller tray assy.	1

5.DRIVE SYSTEM

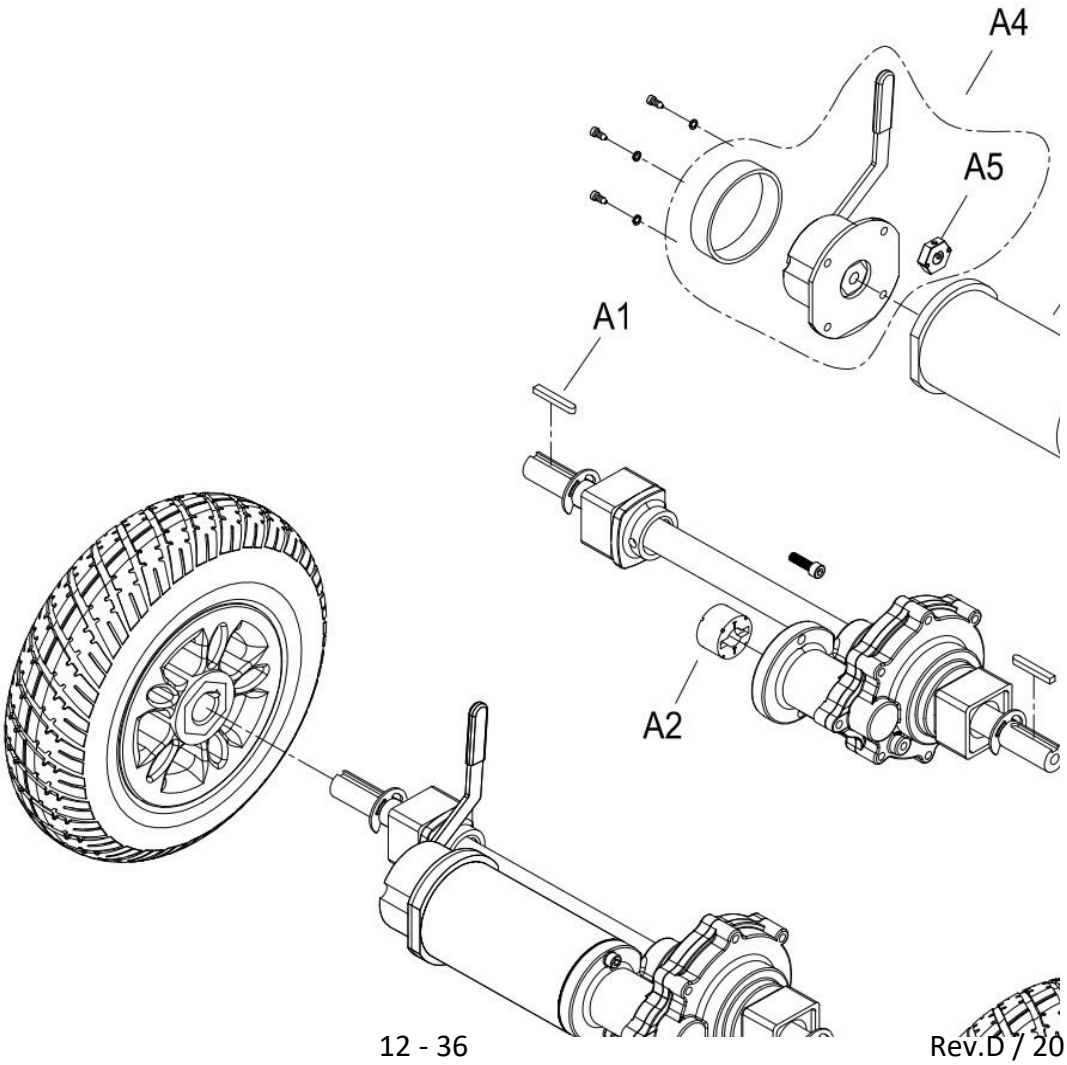

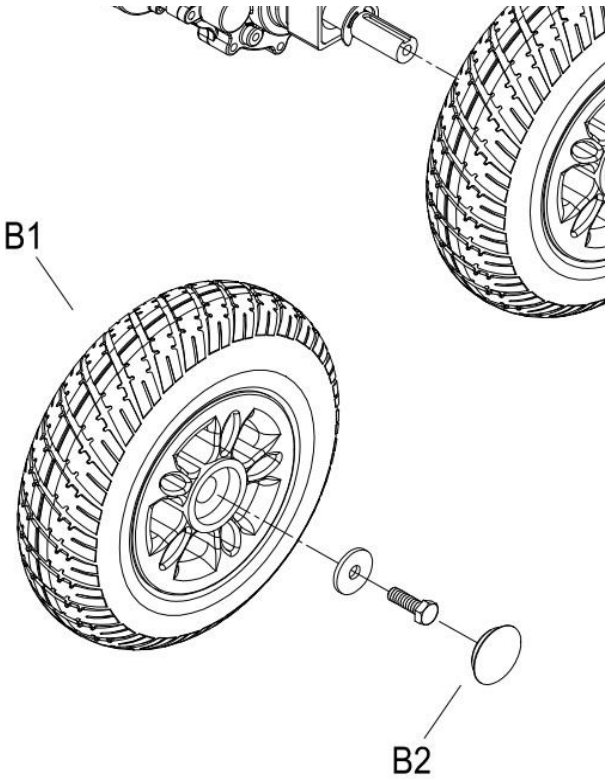

5.DRIVE SYSTEM

販售 Selling	項目 ITEM	品號 Part Number	中文品名 Part Name-CN	英文品名 Part Name-EN	數量 QTY
	A1－B2				
	A1－A5	AC11-3102	差速器總成	Transaxle/Motor/Brake assy.	1
	A1－A2	PM11-0238	差速器	Transaxle	1
	A1	PM13-0201	單圓鍵	Key	2
	A2	PP11-0502	馬達連接器	Shaft	1
	A3	PM11-0354	馬達	Motor assy.	1
	A4	PM11-0125	剎車器	Magnetic brake	1
	A5	PM11-0802	剎車器六角柱	Hexagonal Column	1
	B1－B2	AC08-FAXAE	後輪總成	Rear wheel assy.	2
	B1	AC13-1400-1	後輪	Rear wheel	1
	B2	PP91-0002	輪圈蓋	Rim cap	1

6. SEAT FOLDING ASSEMBLY

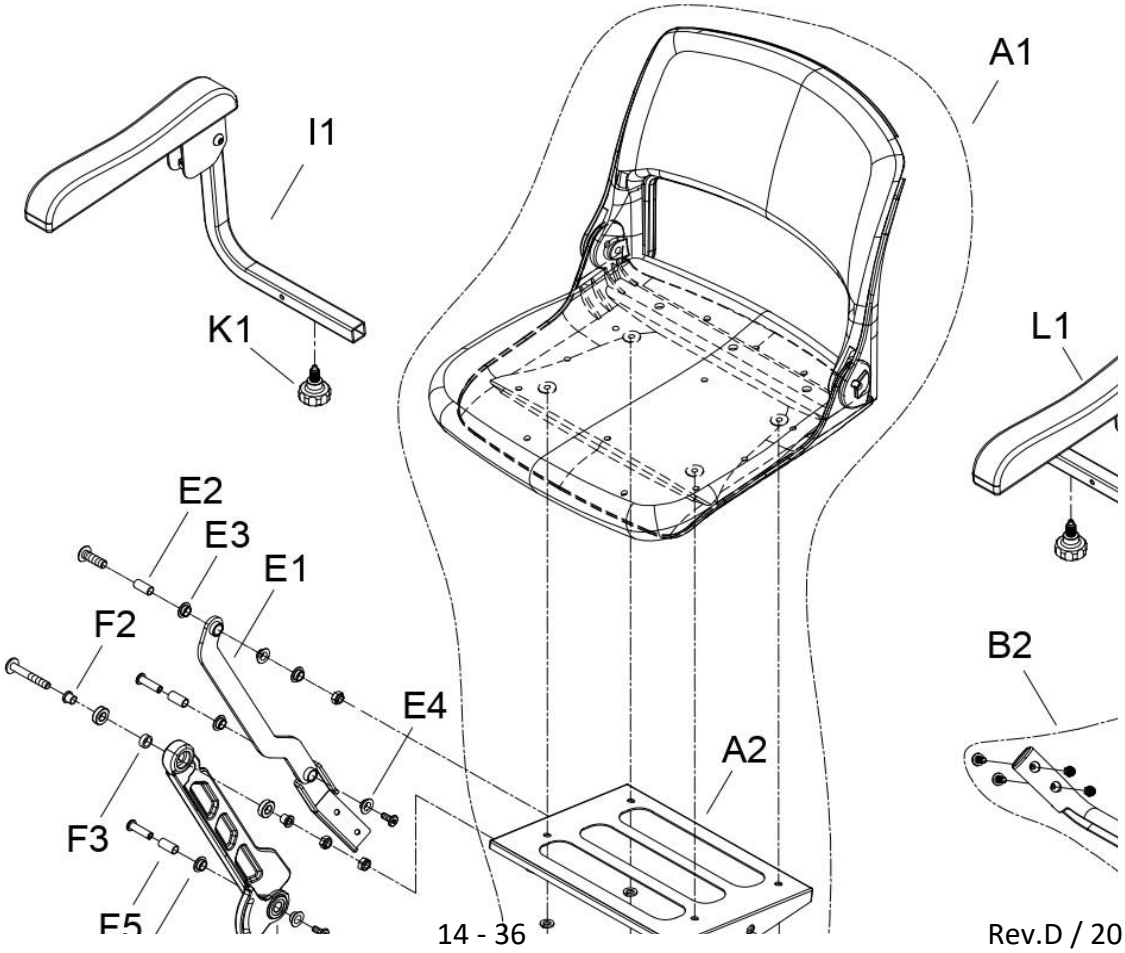

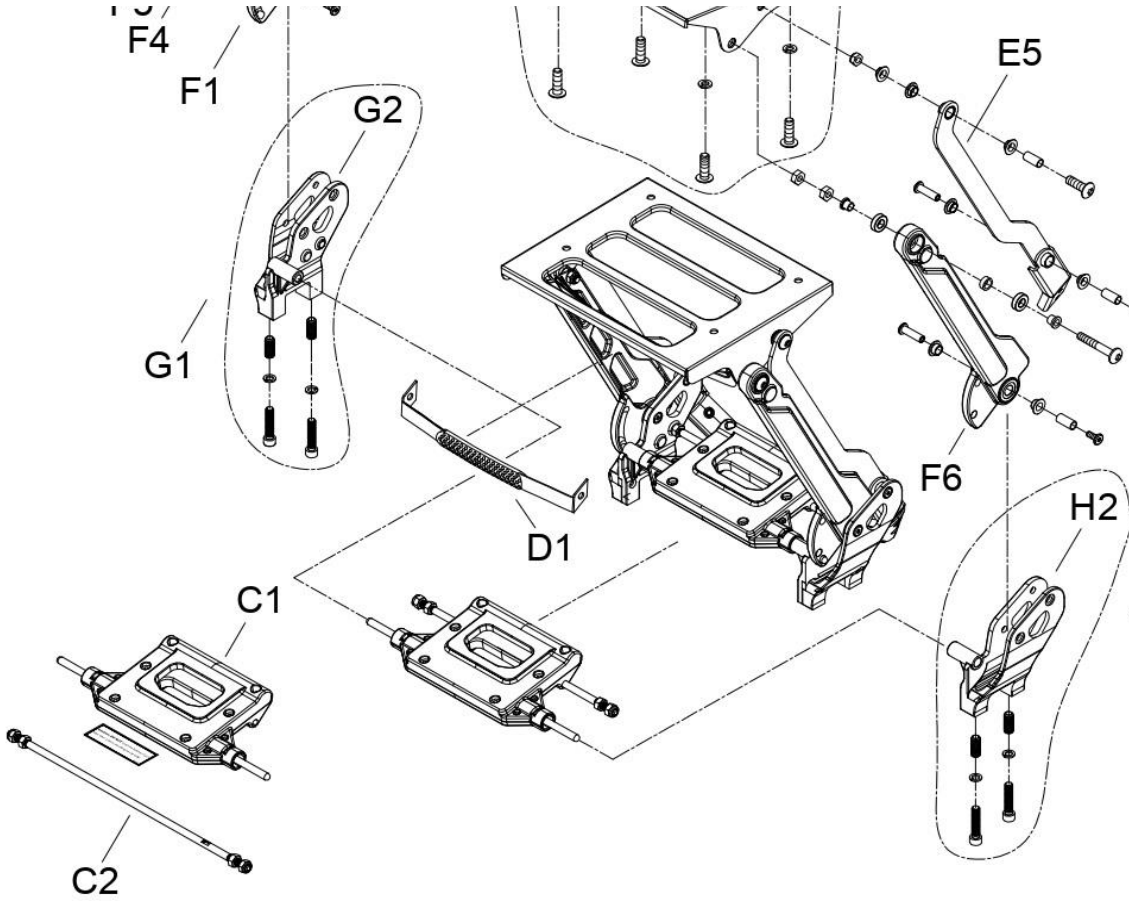

6. SEAT FOLDING ASSEMBLY

販售 Selling	項目 ITEM	品號 Part Number	中文品名 Part Name-CN	英文品名 Part Name-EN	數量 QTY
	A1－L1				
	A1	PA14-A307	座椅小總成(加大椅)	Seat assy.	1
	A2	PM15-0112	椅座承板	Seat bracket	1
	B1	PA07-A410	塑膠後保桿小總成	Rear bumper assy.	1
	B2	PP07-0500	塑膠後保桿	Rear bumper	1
	C1－C2	PA13-A150	座椅固定小總成	Seat folding assy.	1
	C1	PA13-A100	座椅固定小總成	Seat folding assy.	1
	C2	PM09-0313	座椅連桿	Connecting rod	1
	D1	PP90-0110	提帶	Carry belt	1
	E1－E4	PA15-FA12-R	座椅支撐板小總成-右	Seat support link assy. (Right)	1
	E1	PM06-0322-R	座椅支撐板-右	Seat support link (Right)	1
	E2	PM00-0115	套筒	Tube	2
	E3	PP06-0601	T型襯套	Plastic bushing	2
	E4	PP06-0602	T型襯套	Plastic bushing	2
	E2－E5	PA15-FA12-L	座椅支撐板小總成-左	Seat support link assy. (Left)	1
	E5	PM06-0322-L	座椅支撐板-左	Seat support link (Left)	1
	F1－F5	PA15-FA02-R	座椅連動桿小總成-右	Seat support rod assy.(Right)	1

	F1	PM06-0317-R	座椅連動桿-右	Seat support rod (Right)	1
	F2	PM00-0118	T套管	Plastic bushing	2
	F3	PM00-0119	套筒	Tube	1
	F4	PP06-0602	T型襯套	Plastic bushing	2
	F5	PM00-0115	套筒	Tube	1
	F2－F6	PA15-FA02-L	座椅連動桿小總成-左	Seat support rod assy. (Left)	1
	F6	PM06-0317-L	座椅連動桿-左	Seat support rod (Left)	1
	G1	PA07-0020-R	座椅托架小總成-右	Support frame bracket assy. (Right)	1
	G2	PM15-0303-R	座椅托架-右	Support frame bracket (Right)	1
	H1	PA07-0020-L	座椅托架小總成-左	Support frame bracket assy. (Left)	1
	H2	PM15-0303-L	座椅托架-左	Support frame bracket (Left)	1
	I1	AD01-FAJBD-R	座椅扶手總成-右	Armrest assy.(Right)	1
	J1	AD01-FAJBD-L	座椅扶手總成-左	Armrest assy. (Left)	1
	K1	PP00-0202	拉銷旋鈕	Release tighten knob	2
	L1	PP14-0104	扶手墊	Armrest pad	2

7.CONSOLE AND WIRING SYSTEM

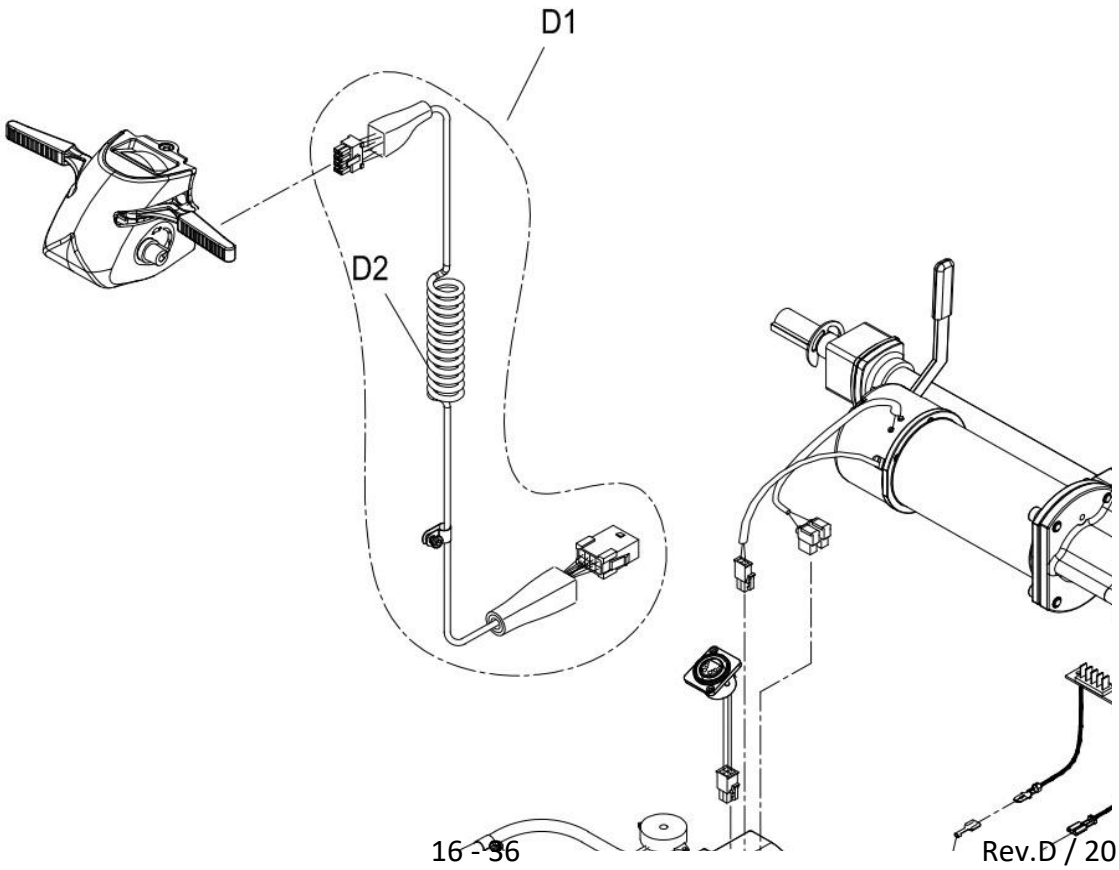

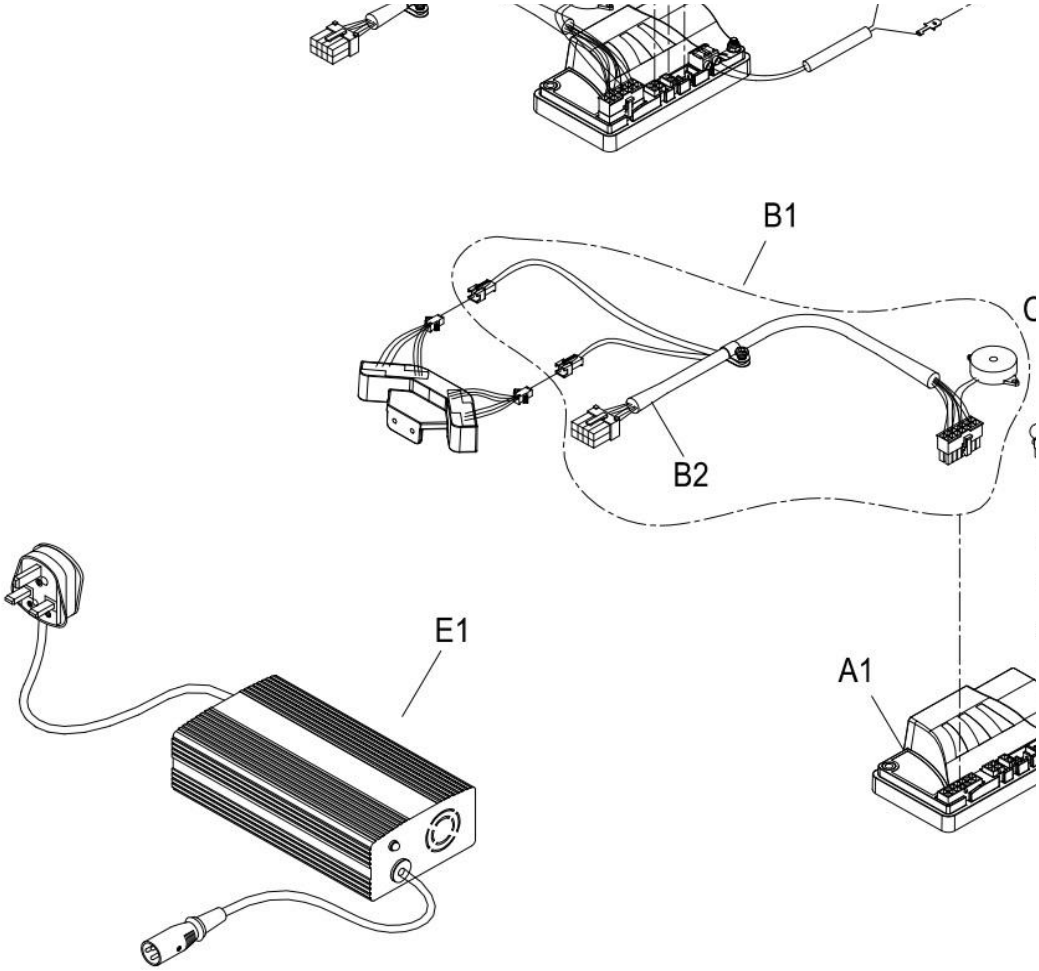

7.CONSOLE AND WIRING SYSTEM

販售 Selling	項目 ITEM	品號 Part Number	中文品名 Part Name-CN	英文品名 Part Name-EN	數量 QTY
	A1－E1				
	A1	PKE2-0112	下控制器	Controller	1
	B1	PAE7-0101	下控主線小總成	Main cable for controller assy.	1
	B2	PKE2-0249	下控主線	Main cable for controller	1
	C1	PK90-0404	電源線	Power cable	1
	D1	PAE6-0501	主線小總成	Main cable assy.	1
	D2	PKE2-0223	主線-長	Main cable	1
	E1	PK90-H504-1	5A充電機	Charger	1

--------P.4

BLY

-------P.6

---------P.8

--------P.10

--------P.12

--------P.14

-------P.16

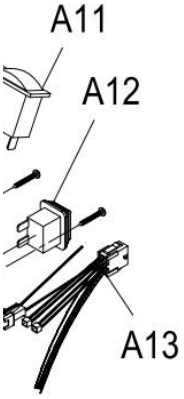
A11
A12
A13

B3

備註 Remark	GBP
W/speed knob	
BM150LED26.4	
ψ31.8	
ψ28.6	

Y

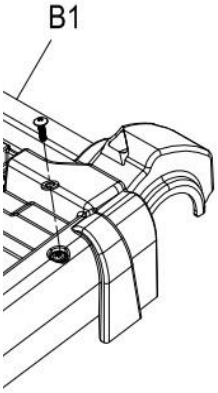

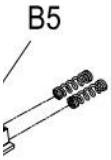

Y

備註 Remark	GBP
◎= BS：Ocean Blue、BG：Light Green、GG：Mineral Grey、PS：Tianium Silver、MY：Mustard Olive	
◎= BS：Ocean Blue、BG：Light Green、GG：Mineral Grey、PS：Tianium Silver、MY：Mustard Olive	
◎= BS：Ocean Blue、BG：Light Green、GG：Mineral Grey、PS：Tianium Silver、MY：Mustard Olive	
◎= BS：Ocean Blue、BG：Light Green、GG：Mineral Grey、PS：Tianium Silver、MY：Mustard Olive	
05M207N-3N2	
3條圓Pin	
10.5AH鋰電	

A1
E2

備註 Remark	GBP
W/reverse cable	
ψ40×ψ26×3mm	
30203	
do22×di18×16.8l	
Up	
ψ10×ψ12×4L	
Down	
ψ16×20L	

6"	
LS-W255	

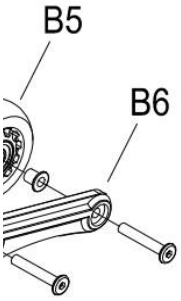

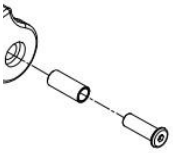

備註 Remark	GBP
ψ8×ψ6×10L	
ψ10×ψ12×4L	
ψ80	

ψ8×ψ6×10l	

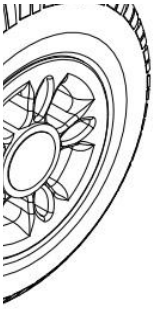

備註 Remark	GBP
3600RPM/120W	
8"	
LS-W241	

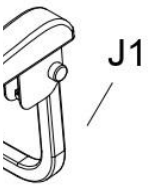
J1

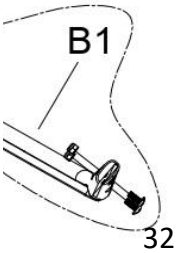
B1

H1

備註 Remark	GBP
M8×P1.25×311L	
ψ10×ψ7.9×21.5L	
ψ10×ψ12×4L	
ψ10×ψ12×10L	

ψ10×ψ8×10L	
ψ14.5×ψ10.6×5.5L	
ψ10×ψ12×10L	
ψ10×ψ7.9×21.5L	
M10×15L	
橢圓型	

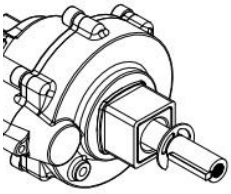

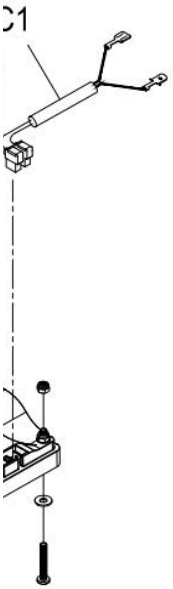

備註 Remark	GBP
DR-90	